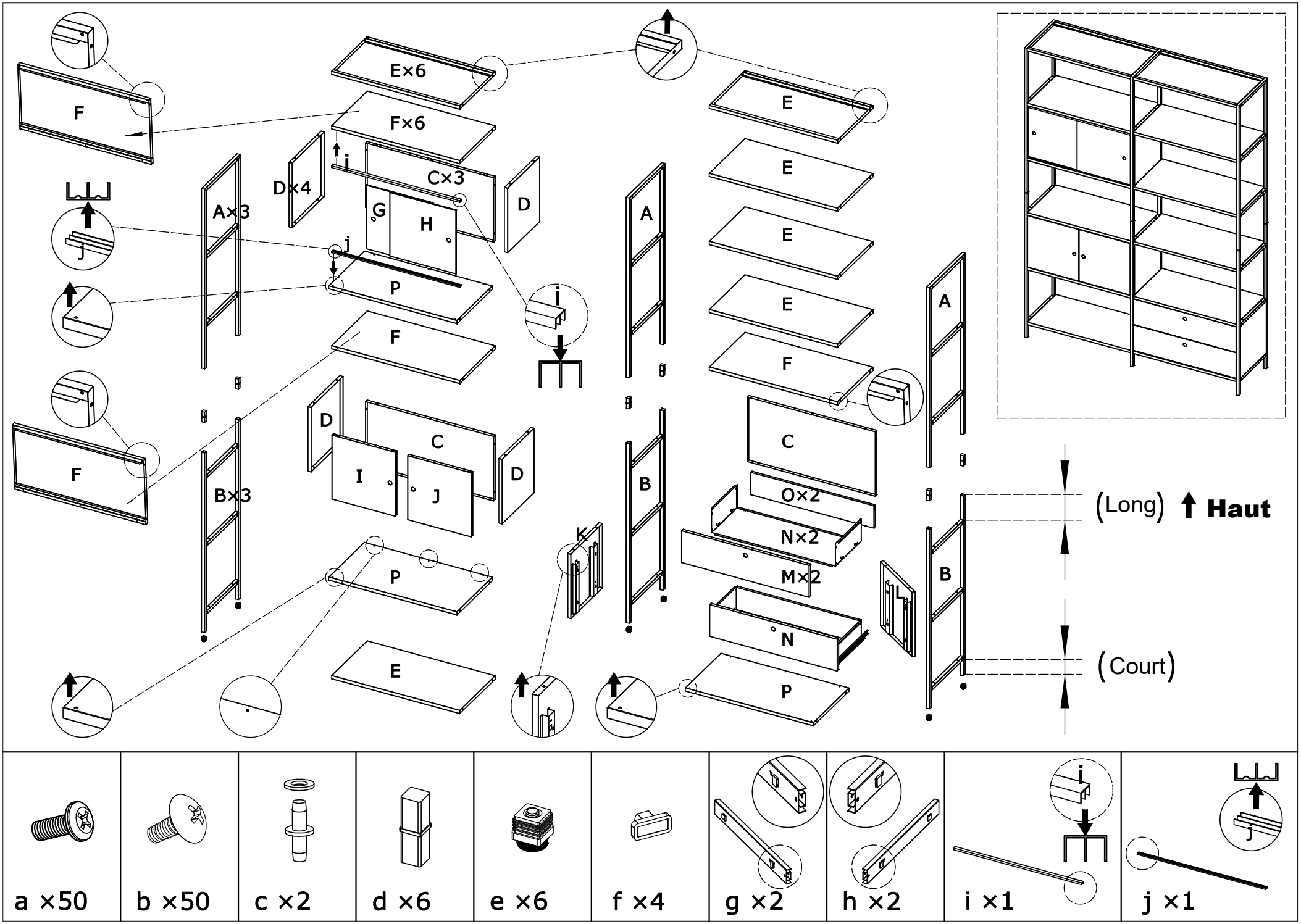
E×6
F×6
F
E
E
E
E
F
A
A
D×4
C×3
D
A×3
G
H
j
j
P
i
i
F
F
D
C
I
J
D
B×3
B
C
O×2
N×2
M×2
K
P
L
B
N
E
P
(Long)
Haut
(Court)
a ×50
b ×50
c ×2
d ×6
e ×6
f ×4
g ×2
h ×2
i ×1
j ×1

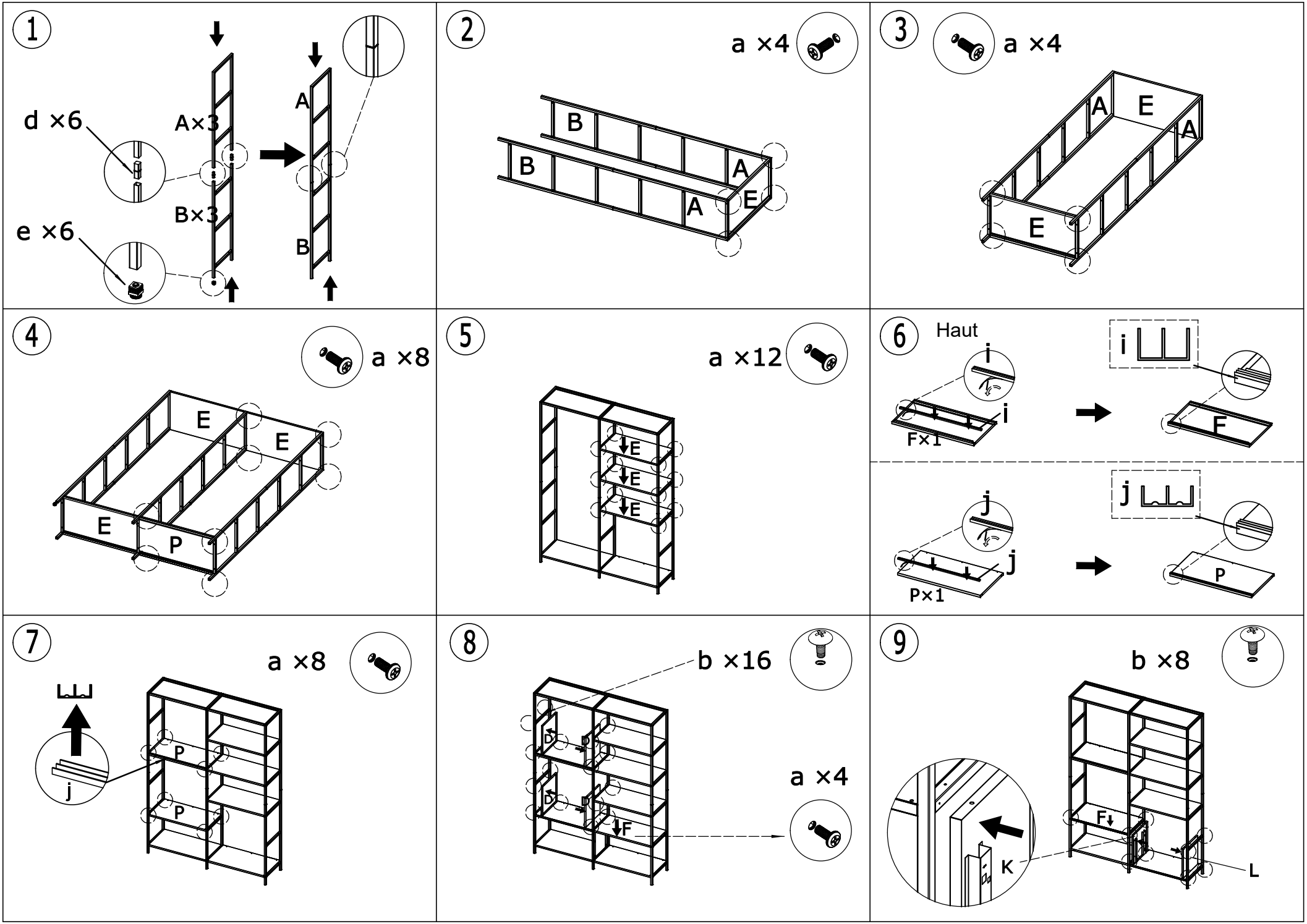
1
d ×6
A×3
B×3
e ×6
A
B
2
a ×4
B
B
A
A
E
3
a ×4
A
E
A
E
4
a ×8
E
E
E
P
5
a ×12
E
E
E
6
Haut
i
i
F×1
i
F
j
j
P×1
j
P
7
a ×8
j
P
P
8
b ×16
a ×4
F
9
b ×8
F
K
L

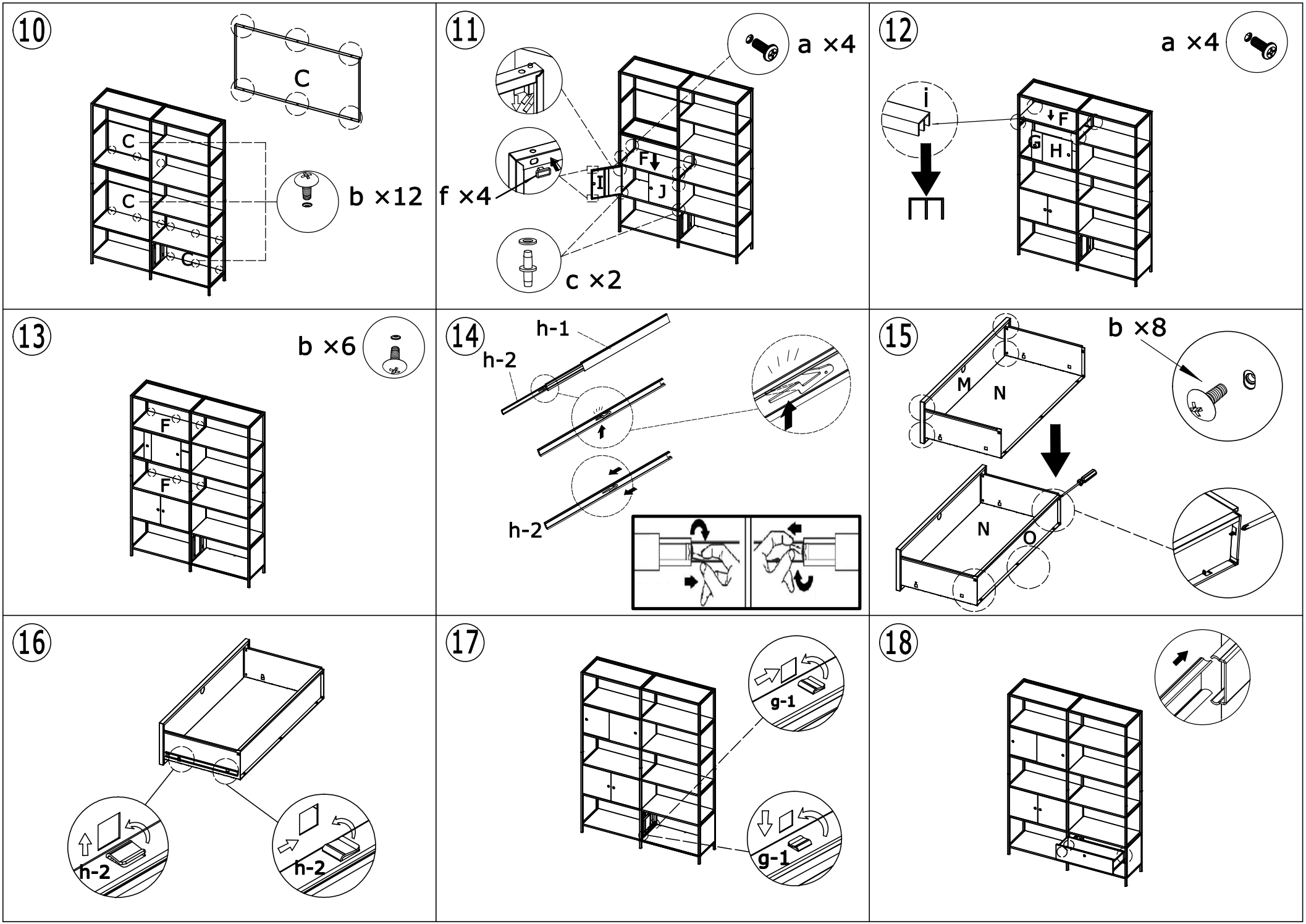
10
C
C
C
C
b ×12
11
a ×4
f ×4
F
I
J
c ×2
12
a ×4
i
F
G
H
13
b ×6
F
F
14
h-1
h-2
h-2
15
b ×8
M
N
N
O
16
h-2
h-2
17
g-1
g-1
18